TYPE	SIZE	UNIT STYLE
STX	3	PO

www.blackmer.com

DIMENSIONS 203-101

Section	203
Effective	October 2002
Replaces	November 2001
Page 1/1	

RIGHT HAND ROTATION. FOR LEFT HAND ROTATION SHAFT PROJECTION IS OPPOSITE THAT SHOWN.

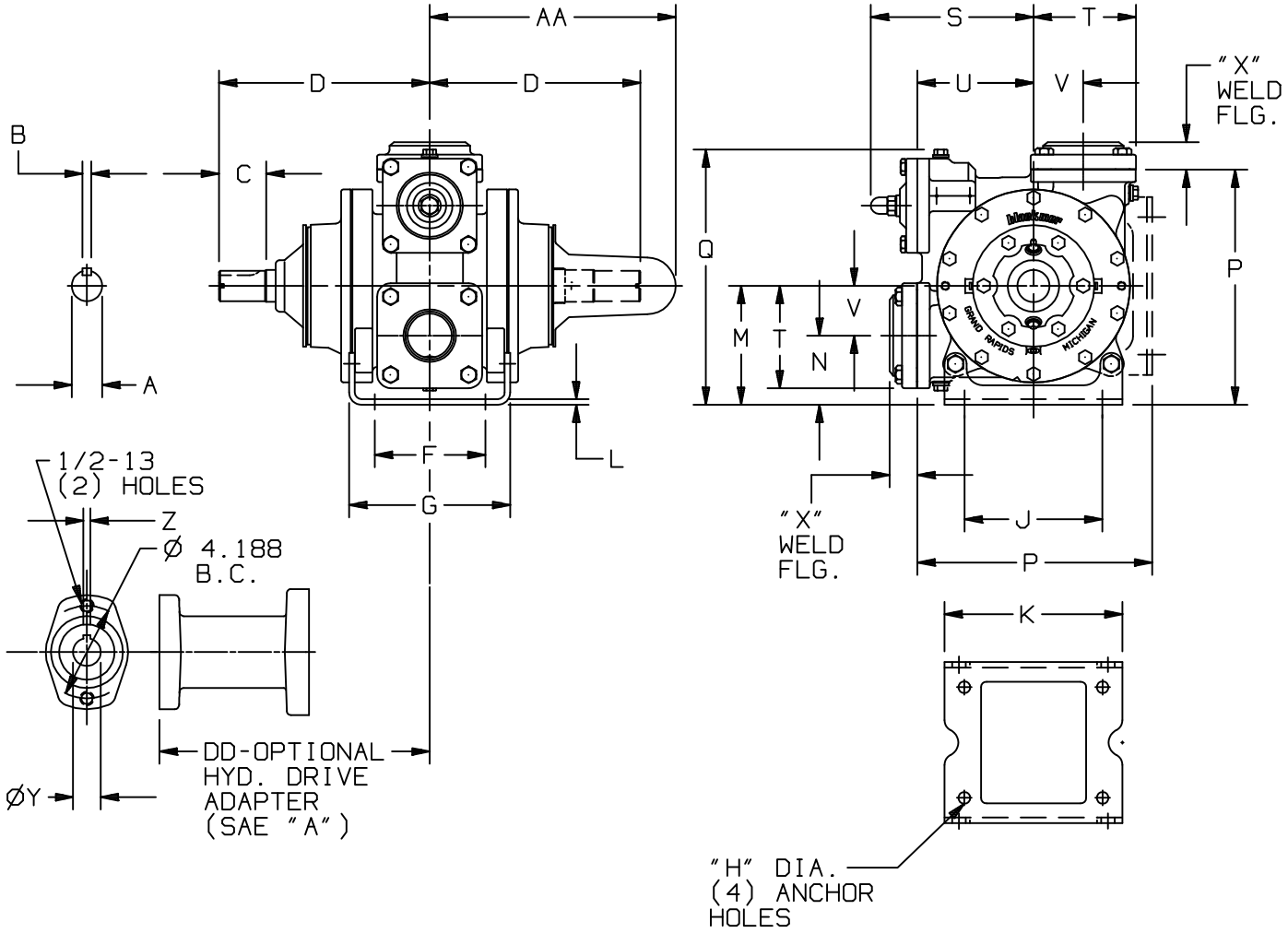

MOTOR			UNITS	DIMENSIONS									
FRAME SIZE				A	B	C	D	E	F	G	H	J	K
			IN	1.375	.393	2.14	9.53	—	5.00	7.28	Ø.53	6.25	8.04
			MM	35	10	54,4	241,9	—	127	184,9	13,5	158,8	204,2
				L	M	N	P	Q	R	S	T	U	V
			IN	.25	5.38	3.12	10.62	11.56	—	8.00	4.63	5.25	2.25
			MM	6,4	136,7	79,3	269,7	293,7	—	203,2	117,6	133,4	57,2
				W	X	Y	Z	AA	BB	CC	DD	EE	FF
			IN	—	1.25	1.25	.313	11.12	—	—	12.21	—	—
			MM	—	31,8	31,8	7,9	282,4	—	—	310,1	—	—
				WEIGHT									
			LBS	132									
			KG	60									