TYPE	SIZE	UNIT STYLE
TX	4A	PO

DIMENSIONS 201-109

Section	201
Effective	Feb 2005
Replaces	Oct 2002
Page 1/1	

RIGHT HAND ROTATION. FOR LEFT HAND ROTATION, SHAFT PROJECTION IS OPPOSITE THAT SHOWN.

STD. CONNECTIONS:	OPTIONAL PIPE CONNECTIONS:
INTAKE, DISCH. } 4" THD. FL.	4" WELD FL.

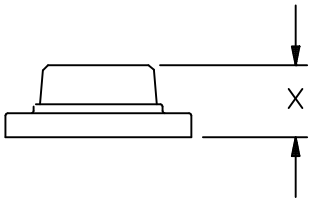

W = 4"-THD. FL. ARE N.P.T.
X = 4"-WELD FL. ARE NECK-BUTT WELD
} SPECIAL BLACKMER FLANGES

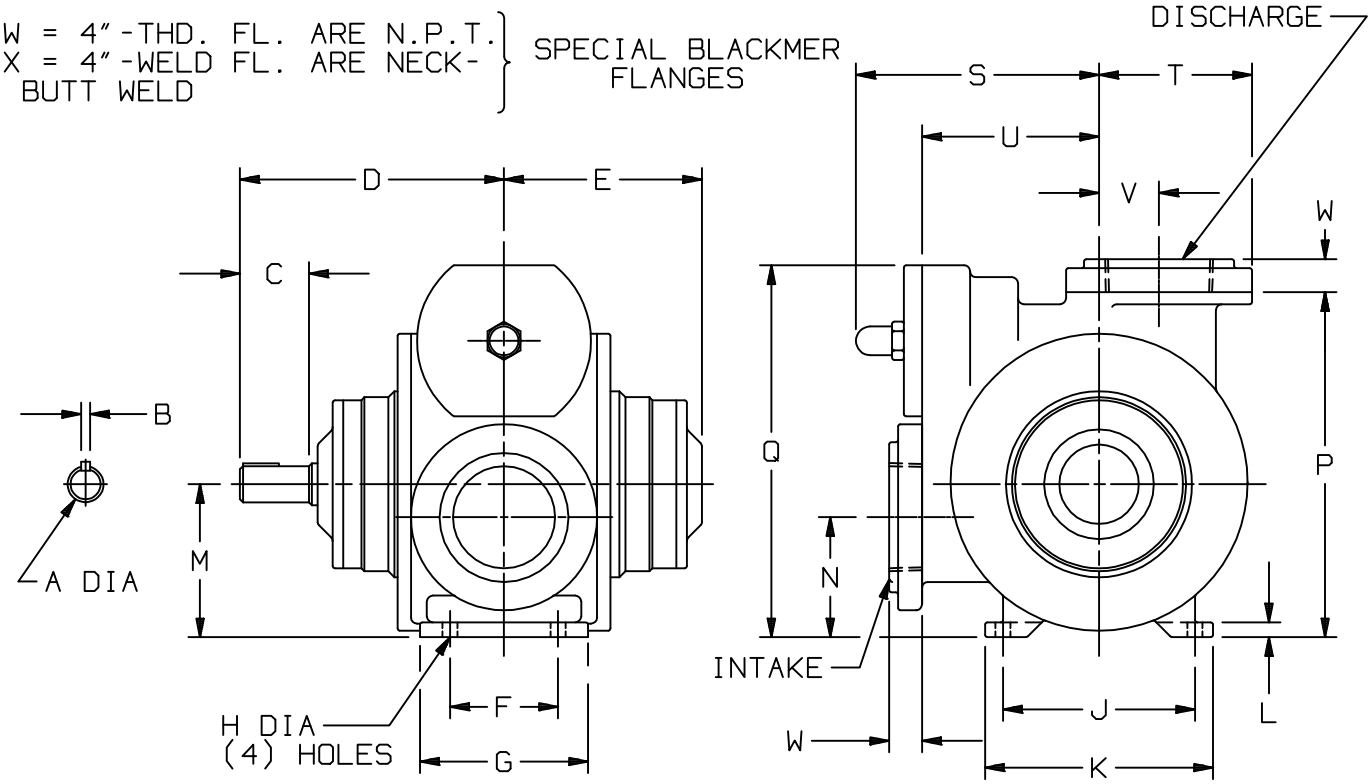

MOTOR FRAME SIZE			UNITS	DIMENSIONS									
				A	B	C	D	E	F	G	H	J	K
			IN	1 1/2	3/8	2 7/8	11	8 1/4	4 1/2	7	5/8	8	9 1/2
			MM	38,10	9,53	73,03	279,40	209,55	114,30	177,80	15,88	203,20	241,30
				L	M	N	P	Q	R	S	T	U	V
			IN	5/8	6 3/8	5	14 3/8	15 1/2	—	10 1/8	6 3/8	7 3/8	2 1/2
			MM	15,88	161,93	127,00	365,13	393,70	—	257,18	161,93	187,33	63,50
				W	X	Y	Z	AA	BB	CC	DD	EE	FF
			IN	1 3/8	3	—	—	—	—	—	—	—	—
			MM	34.93	76,20	—	—	—	—	—	—	—	—
				WEIGHT WITHOUT FLANGES									
			LBS	295									
			KG	134									