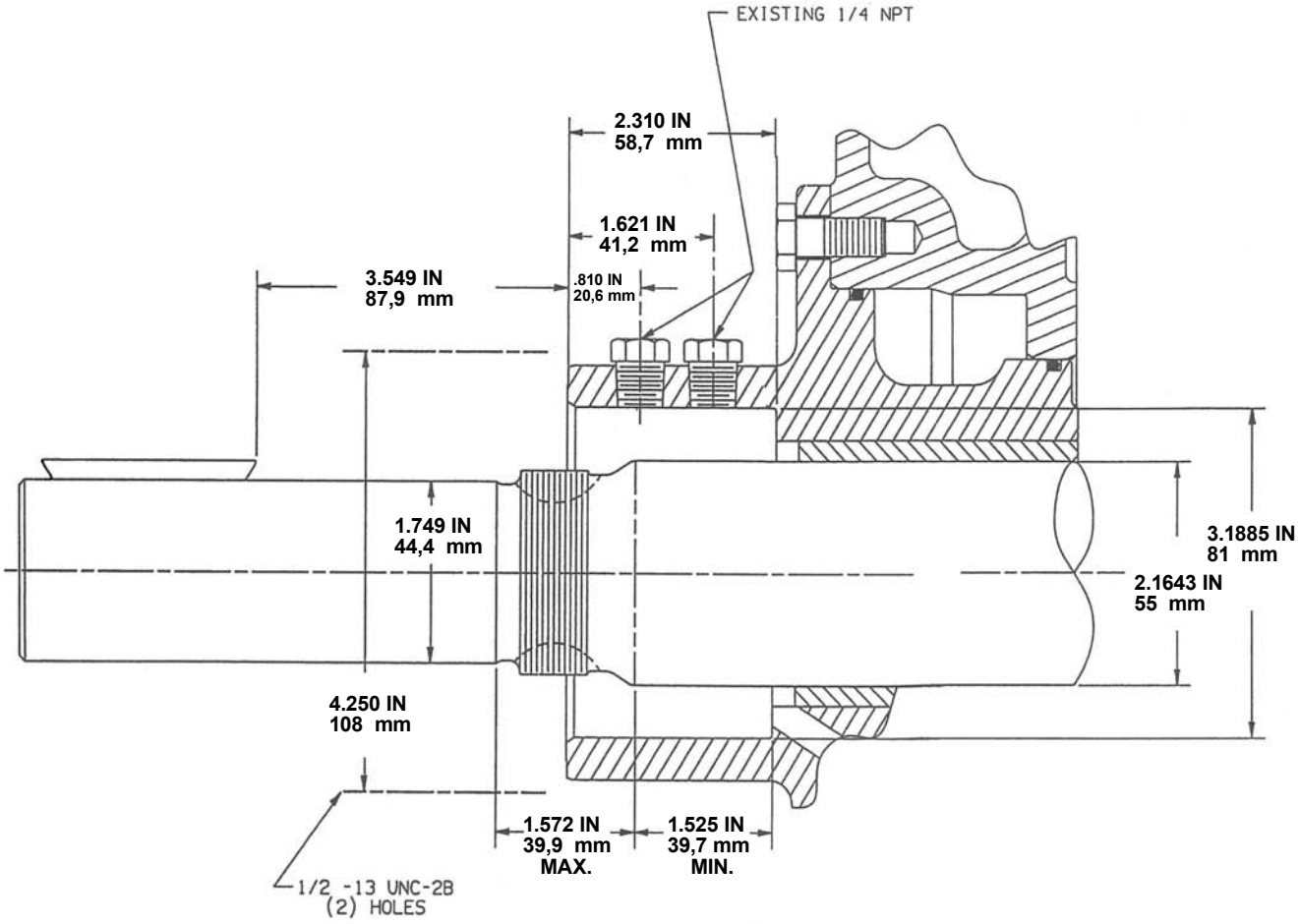Blackmer www.blackmer.com	TYPE	SIZE	DIMENSIONS 106-117	
	STUFFING BOX DIMENSIONS	ML4	Section Effective Replaces Page 1 / 1	106 October 2004 NEW